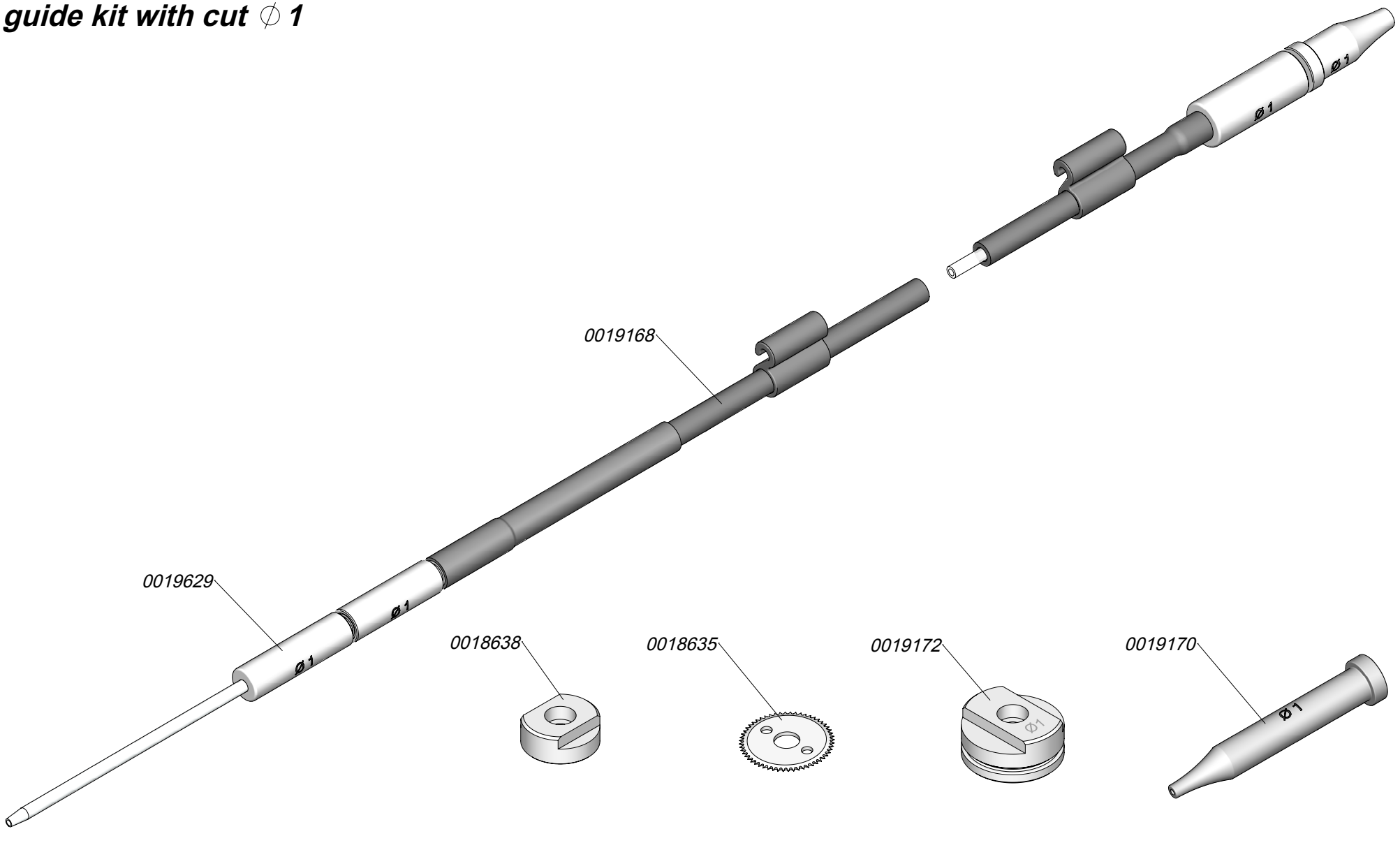GSF10V
SF guide kit with cut ∅ 1